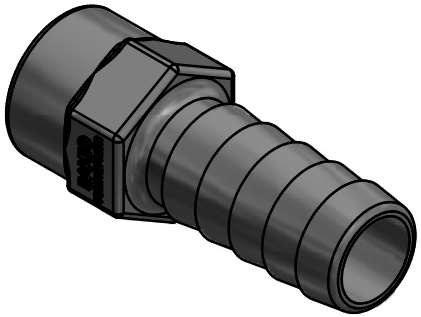

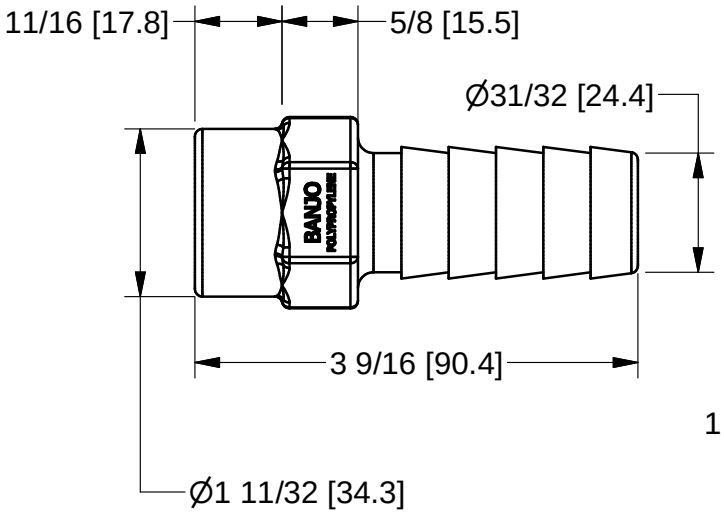

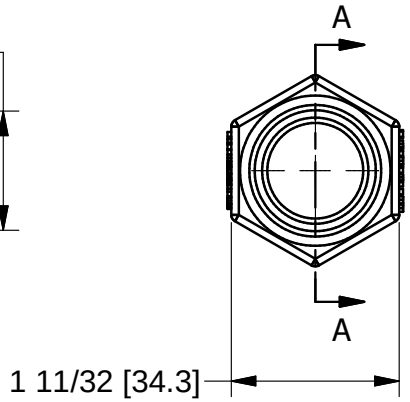

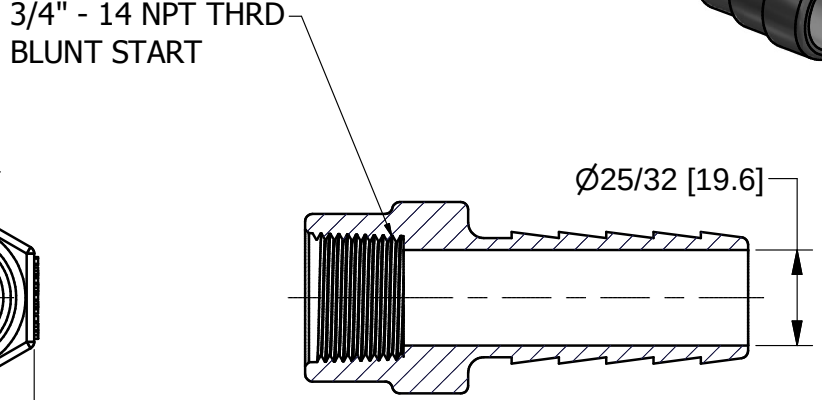

SECTION A-A
SCALE 1 : 1

Note: Parts are to be bagged.

THIS DRAWING AND ALL INFORMATION CONTAINED THEREON ARE THE EXCLUSIVE PROPERTY OF BANJO CORPORATION.

UNLESS SPECIFICALLY NOTED, THIS DRAWING AND ITEMS SHOWN ON THIS DRAWING ARE SUBJECT TO CHANGE AT ANY TIME.

BANJO CORPORATION
150 BANJO DRIVE, CRAWFORDSVILLE, IN 47933
WEB SITE: WWW.BANJOCORP.COM
E-MAIL: BANJOSALES@IDEXCORP.COM

DESCRIPTION
3/4" FNPT X 1" HOSE BARB

PART NUMBER
HBF075-100