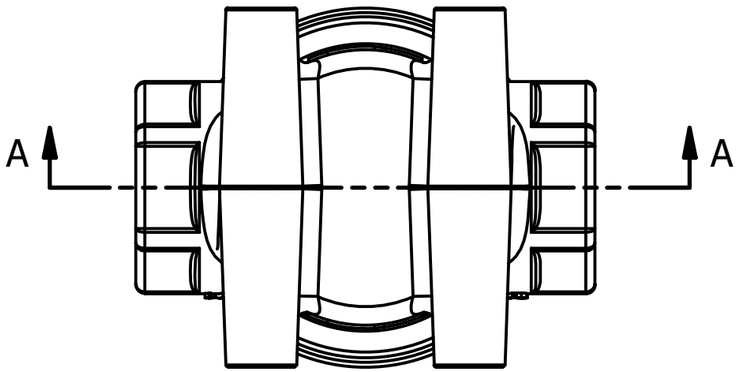

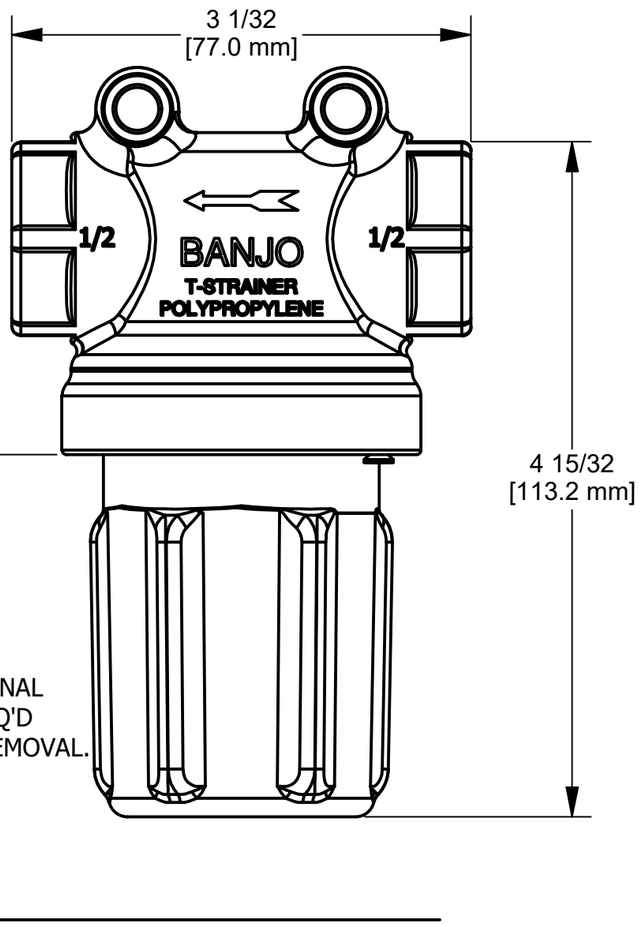

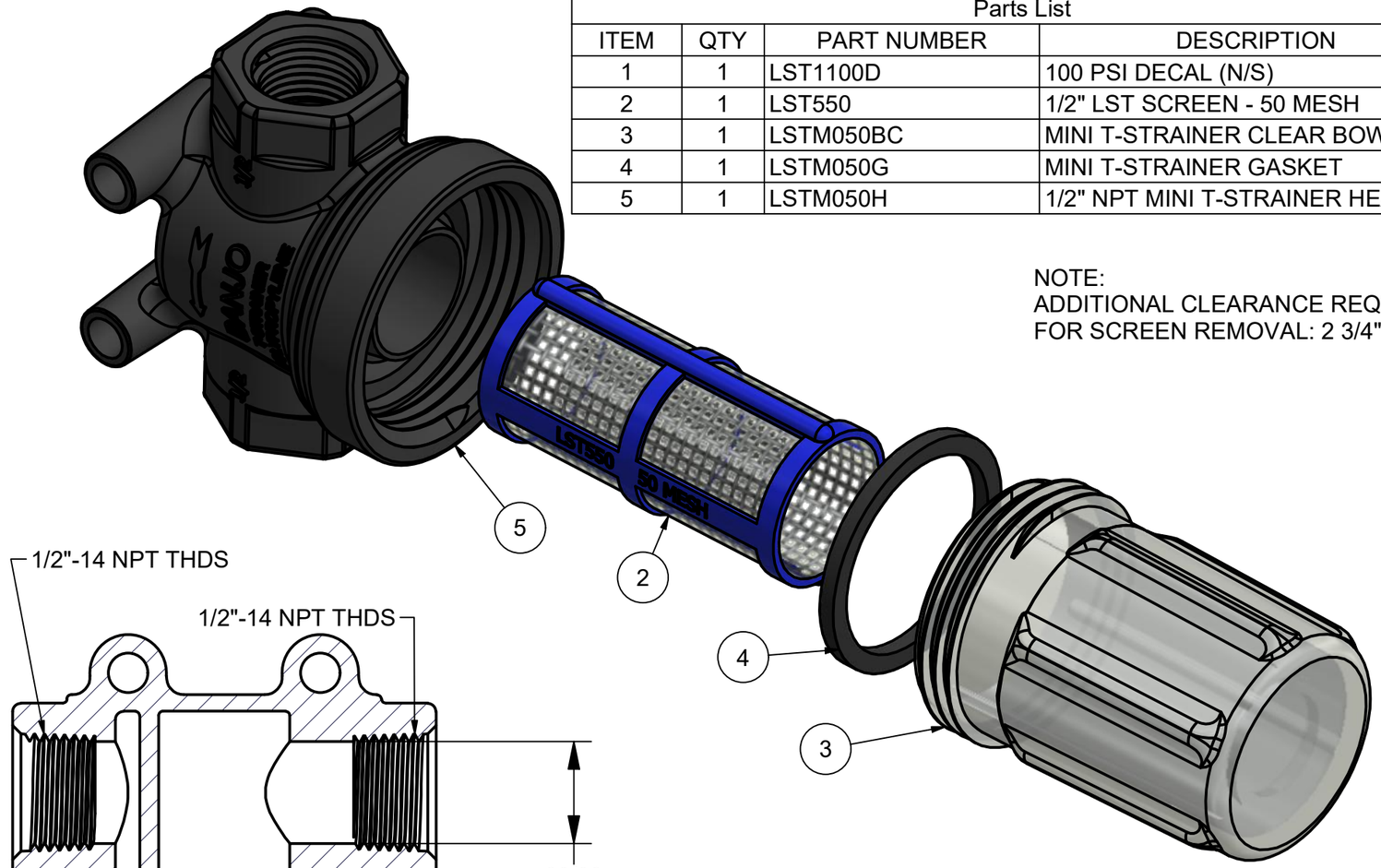

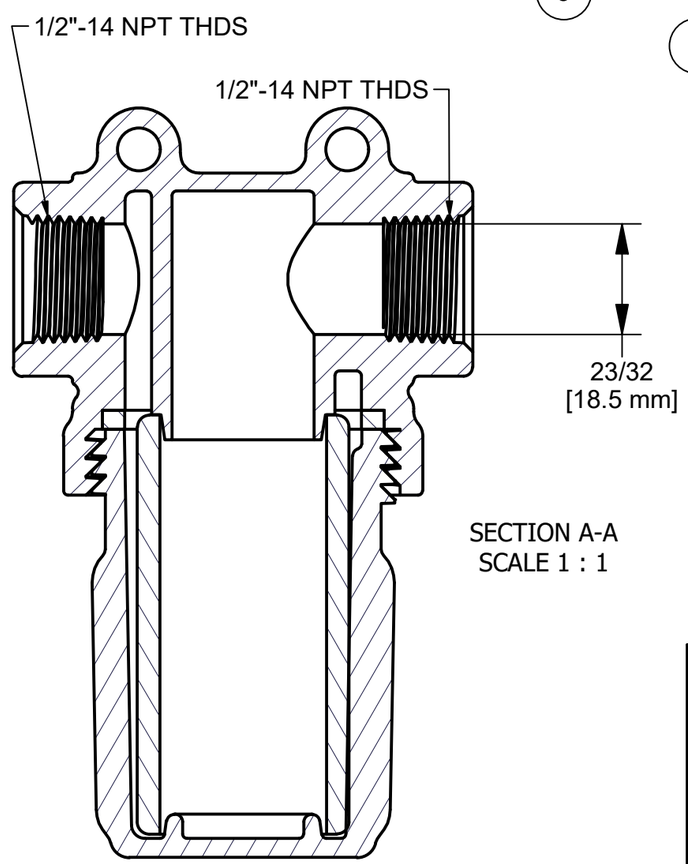

SECTION A-A
SCALE 1 : 1

NOTE:
ADDITIONAL CLEARANCE REQ'D
FOR SCREEN REMOVAL: 2 3/4"

Parts List

ITEM	QTY	PART NUMBER	DESCRIPTION
1	1	LST1100D	100 PSI DECAL (N/S)
2	1	LST550	1/2" LST SCREEN - 50 MESH
3	1	LSTM050BC	MINI T-STRAINER CLEAR BOWL
4	1	LSTM050G	MINI T-STRAINER GASKET
5	1	LSTM050H	1/2" NPT MINI T-STRAINER HEAD

THIS DRAWING AND ALL INFORMATION CONTAINED THEREON ARE THE EXCLUSIVE PROPERTY OF BANJO CORPORATION.

UNLESS SPECIFICALLY NOTED, THIS DRAWING AND ITEMS SHOWN ON THIS DRAWING ARE SUBJECT TO CHANGE AT ANY TIME.

BANJO CORPORATION
150 BANJO DRIVE, CRAWFORDSVILLE, IN 47933
WEB SITE: WWW.BANJOCORP.COM
E-MAIL: BANJOSALES@IDEXCORP.COM

DESCRIPTION
1/2" T-Strainer w/ Clear Bowl - 50 Mesh

PART NUMBER
LSTM050-50C