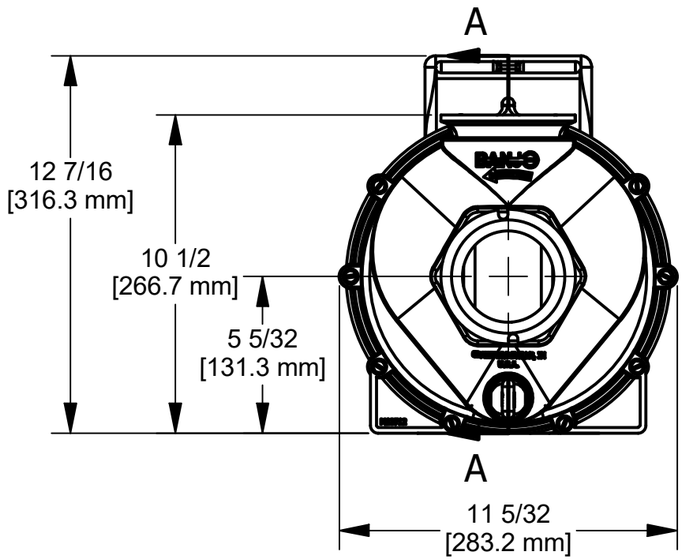

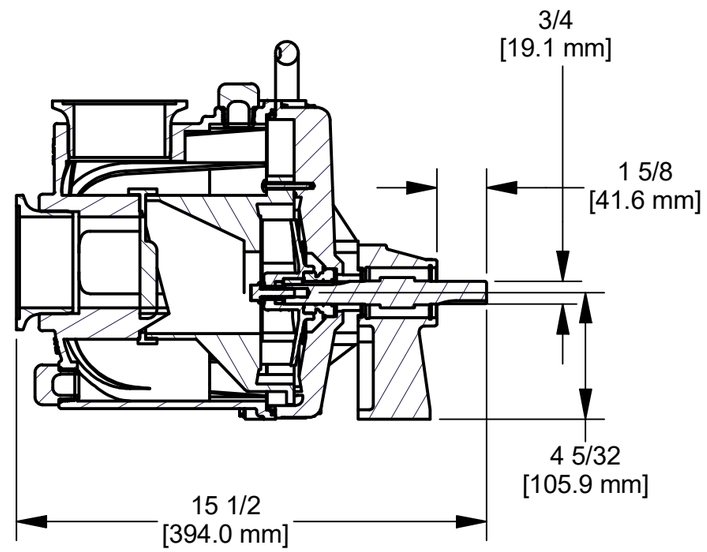

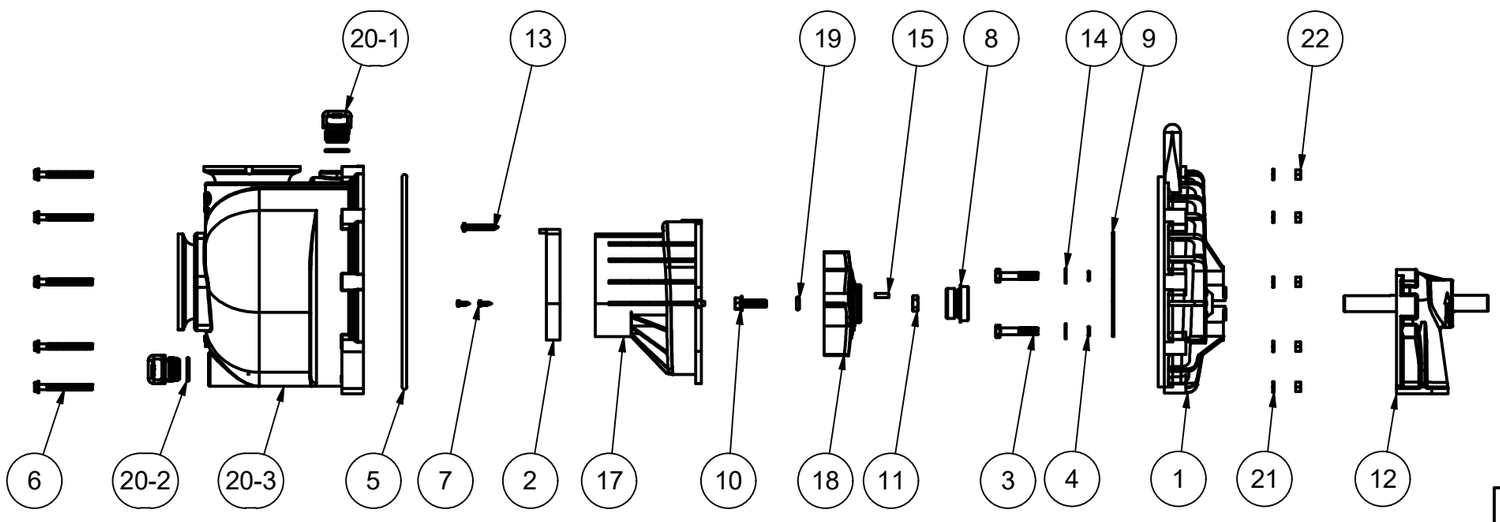

PARTS LIST

ITEM	QTY	PART NUMBER	DESCRIPTION
1	1	12703A	POLY PUMP REAR BRACKET
2	1	12705	PUMP CHECKVALVE, EPDM
3	4	12715A	5/16-24 X 1 3/4" HHCS WITH TORQ-PATCH
4	4	12717	AS568A -011 O-RING, EPDM
5	1	12719A	AS568A -375 O-RING, EPDM, BLACK
6	10	12720	1/4-20 X 2 1/2" SL IND HWHS
7	2	12725	#6 X 1/2" PPH SMS
8	1	12733	MECHANICAL SEAL ASSY
9	1	12754	O'RING SEGMENT
10	1	12765A	5/16-24 X 1 1/8" HFS
11	1	12775A	7/16-14 HEX NUT
12	1	12882A	BEARING PEDESTAL
13	1	12900	#10 X 1 1/2" PPH SMS
14	4	12901	5/16" FLAT WASHER
15	1	12902A	3/16" SQ. X 5/8" KEY
16	1	12910	DECAL (N/S)
17	1	13702	3" POLY PUMP VOLUTE
18	1	13771	3" POLY PUMP TRIMMED IMPELLER
19	1	A204	AS568A -204 O-RING, EPDM, BLACK
20	1	M13712	3" MNFLD POLY PUMP BODY ASSY.
20-1	2	13777	3/4" DRAIN PLUG
20-2	2	13778	AS568A -119 O-RING, EPDM, BLACK
20-3	1	M13712Y	3" MNFLD POLY PUMP BODY ASSY.
21	10	V07018	1/4" LOCKWASHER
22	10	V07019	1/4-20 HEX NUT

THIS DRAWING AND ALL INFORMATION CONTAINED THEREON ARE THE EXCLUSIVE PROPERTY OF BANJO CORPORATION.

UNLESS SPECIFICALLY NOTED, THIS DRAWING AND ITEMS SHOWN ON THIS DRAWING ARE SUBJECT TO CHANGE AT ANY TIME.

BANJO CORPORATION
150 BANJO DRIVE, CRAWFORDSVILLE, IN 47933
WEB SITE: WWW.BANJOCORP.COM
E-MAIL: BANJOSALES@IDEXCORP.COM

DESCRIPTION
3" POLY PUMP W/ BEARING PEDESTAL

PART NUMBER
M300PB