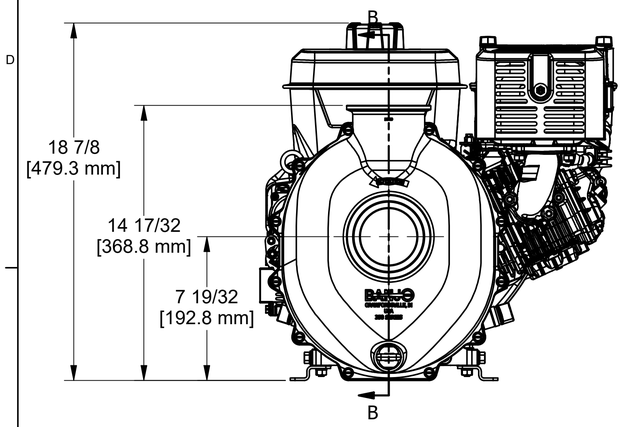

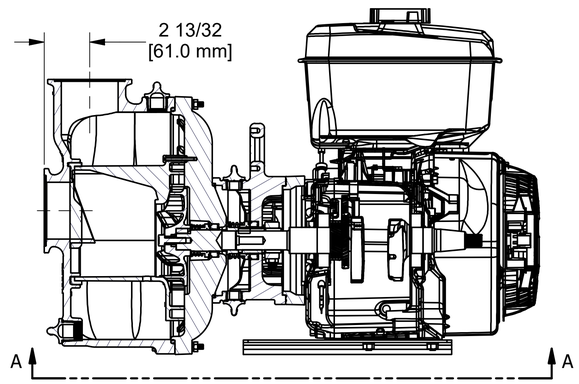

SECTION B-B
SCALE 1/4

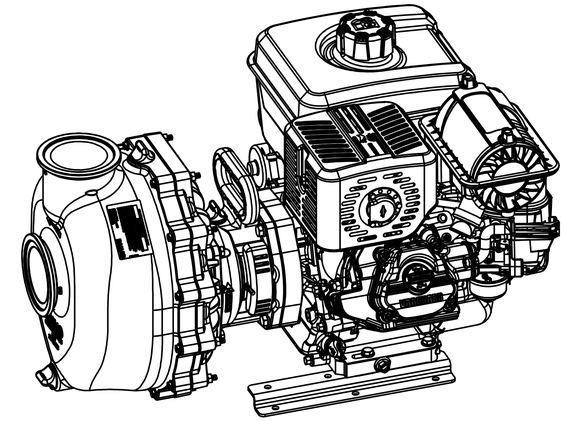

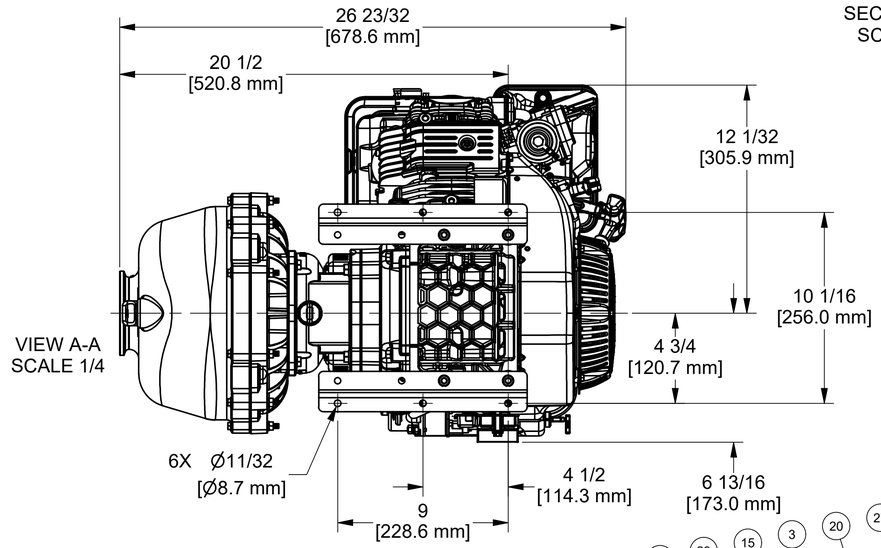

VIEW A-A
SCALE 1/4

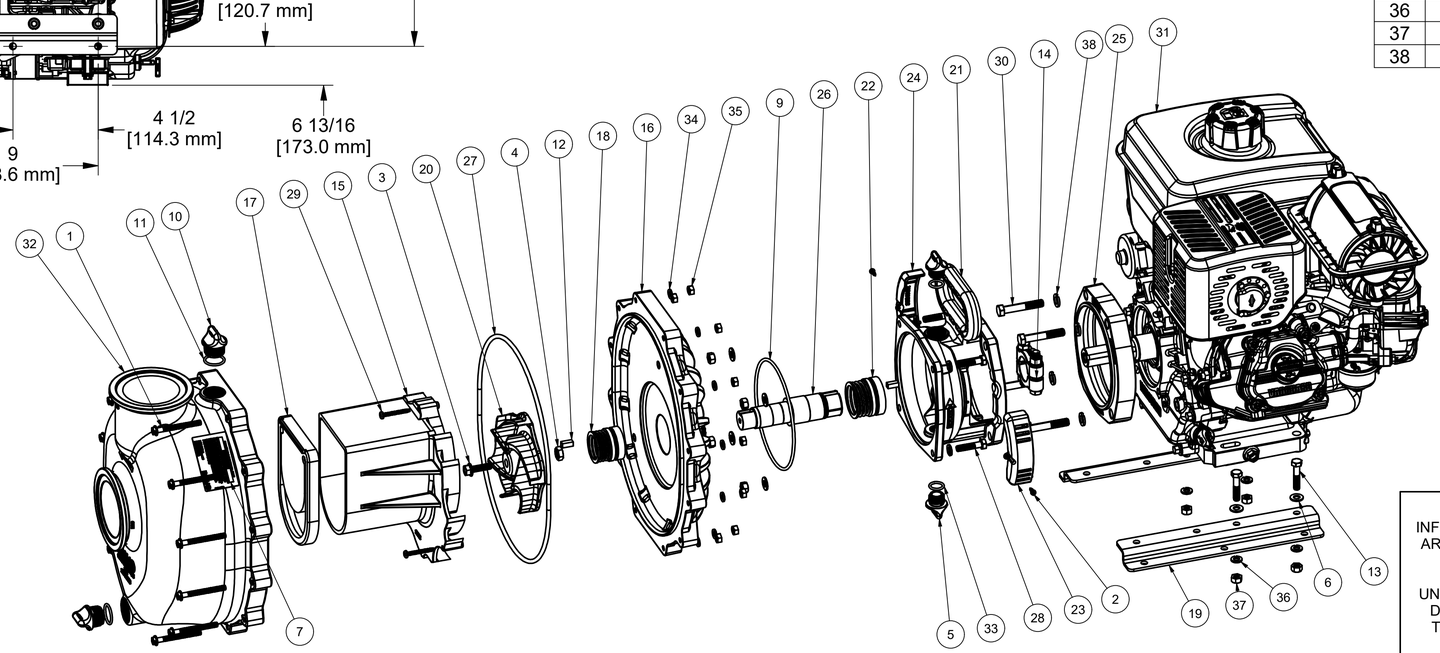

Parts List

ITEM	QTY	PART NUMBER	DESCRIPTION
1	12	12720	1/4-20 X 2 1/2" SL IND HEX WASHER HEAD SCREW
2	2	12725	#6 X 1/2" PPH SMS
3	1	12765A	5/16-24 X 1 1/8" HFS
4	1	12775A	7/16-14 HEX NUT
5	2	12777	1/2" DRAIN PLUG
6	8	12901	5/16" FLAT WASHER
7	1	12910	PUMP WARNING LABEL
9	1	13719	AS568A -256 O-RING, EPDM, BLACK
10	2	13777	3/4" DRAIN PLUG, MOLDED
11	2	13778	AS568A -119 O-RING, EPDM, BLACK
12	2	16901SS	1/4" SQ. X 5/8" KEY 18-8 SS
13	4	17034	5/16-18 X 1-1/2" HHCS
14	1	18029	CLAMP
15	1	35002	M350 DIFFUSER
16	1	35004	M350 REAR BRACKET
17	1	35005	3" WET SEAL POLY PUMP CHECK VALVE
18	1	35113E	1.125" MECHANICAL SEAL, EPDM, BULK
19	2	35033	Z-RAIL FOR M350PH13W
20	1	35073	M350 5-VANE IMPELLER
21	1	35201	M350 WET SEAL RESERVOIR
22	1	35313E	1.375" MECHANICAL SEAL, EPDM, BULK
23	1	35246GL	LEFT SHAFT GUARD FOR M350P
24	1	35246GR	RIGHT SHAFT GUARD FOR M350P
25	1	35248	M350 ENGINE SPACER
26	1	35255A	3" WET SEAL POLY PUMP SHAFT ADAPTER FOR BEM15-100
27	1	A380E	AS568 #380 EPDM O-RING
28	4	B0516138	5/16-18 X 1 3/8" HHCS
29	3	B1014150TS	#10 X 1 1/2 THREAD FORMING SCREW, 18-8 SS
30	4	BF207	3/8-16 X 2 1/4" HHCS
31	1	E14VAN	14 HP BRIGGS VANGUARD 400
32	1	M35012	M350 MANIFOLD BODY
33	2	UV15163	AS568A -114 O-RING, EPDM, BLACK
34	12	V07018	1/4" LOCKWASHER
35	12	V07019	1/4"-20 S.S. HEX NUT
36	8	V10118	5/16" LOCKWASHER
37	8	V10119	5/16"-18 SS NUT
38	4	V20018	3/8" LOCKWASHER

THIS DRAWING AND ALL INFORMATION CONTAINED THEREON ARE THE EXCLUSIVE PROPERTY OF BANJO CORPORATION.

UNLESS SPECIFICALLY NOTED, THIS DRAWING AND ITEMS SHOWN ON THIS DRAWING ARE SUBJECT TO CHANGE AT ANY TIME.

BANJO®
Liquid Handling Products

BANJO CORPORATION
A UNIT OF IDEX CORPORATION
150 BANJO DRIVE, CRAWFORDSVILLE, IN 47933
WEB SITE: WWW.BANJOCORP.COM
E-MAIL: BANJOSALES@IDEXCORP.COM

DESCRIPTION:
3" WET SEAL POLY PUMP 14HP VAN

PART NUMBER:
M350PVAN14W